E4010-2 Instrument Panel
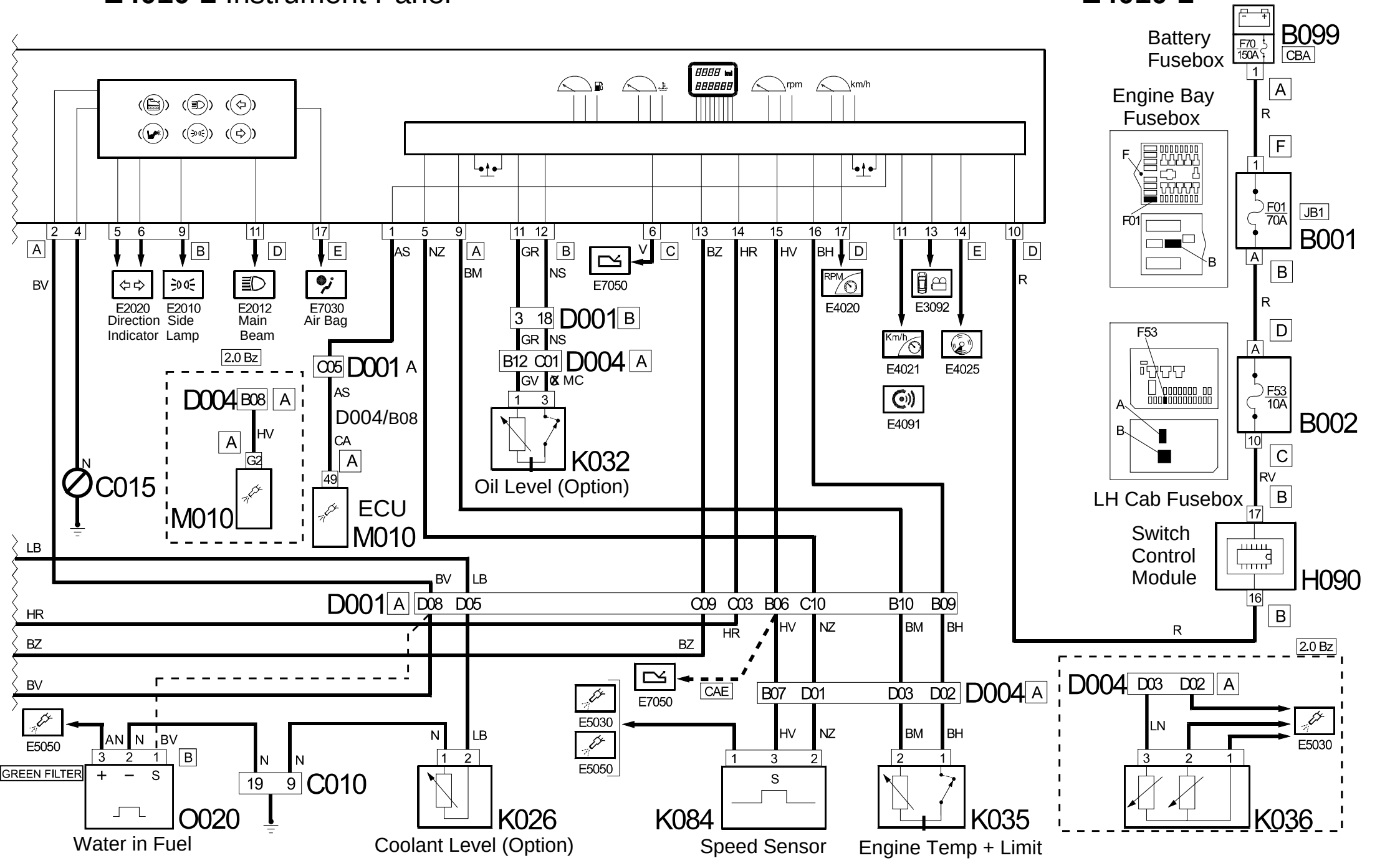
E4010-2